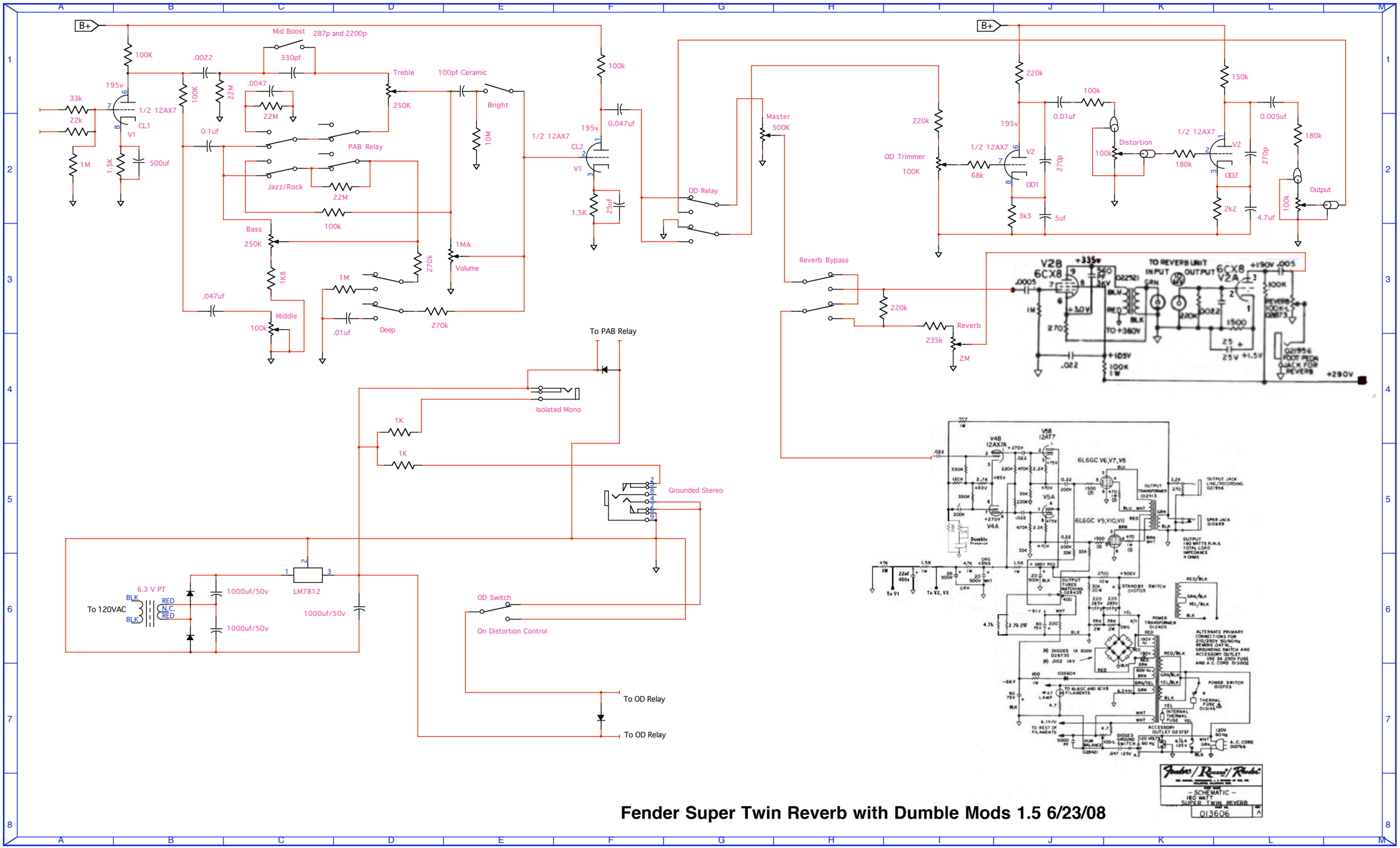

Fender Super Twin Reverb with Dumble Mods 1.5 6/23/08