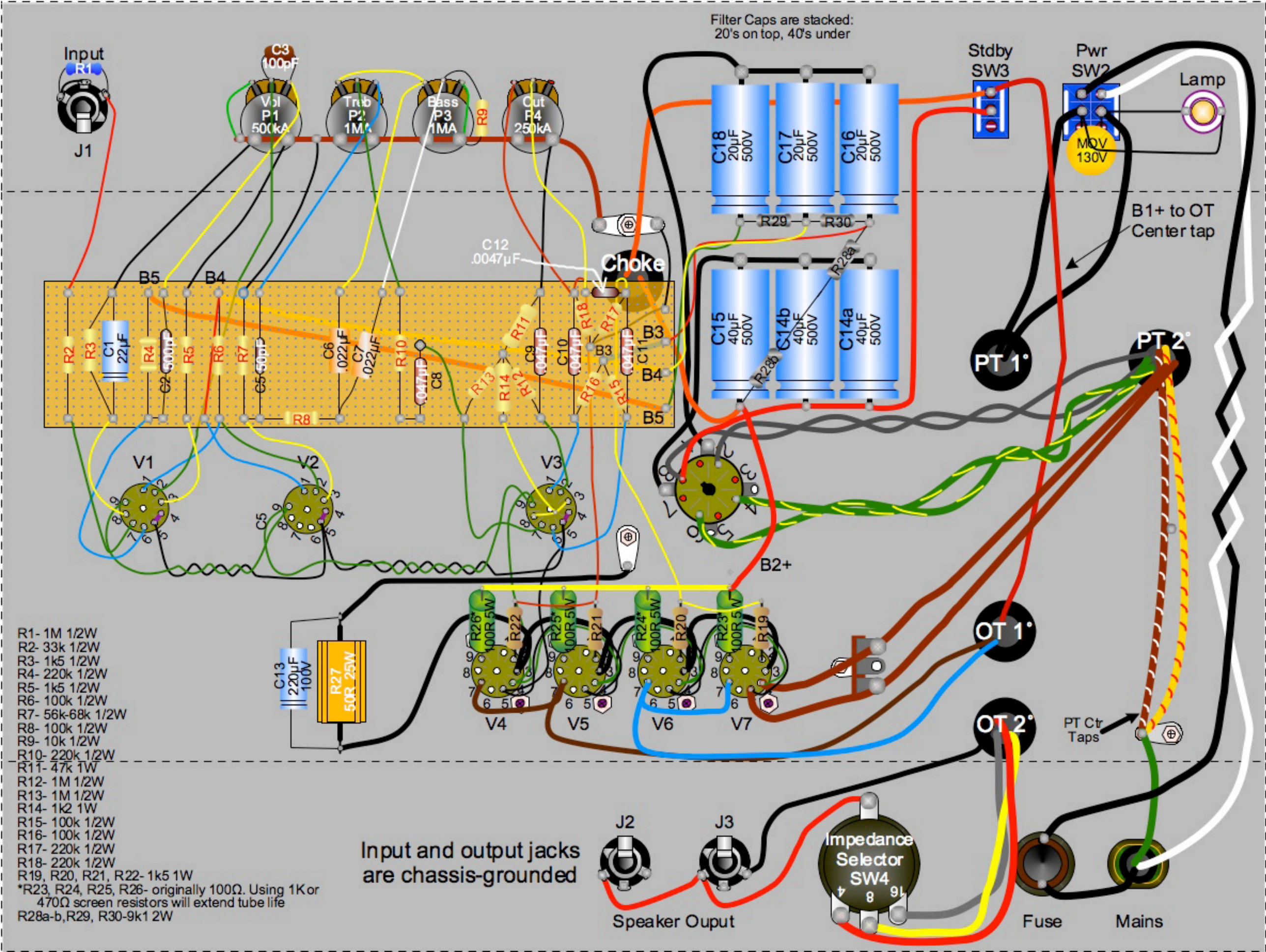
Filter Caps are stacked:
20's on top, 40's under
Input
R1
J1
C3
100pF
Vol
P1
500kA
Treb
P2
1MA
Bass
P3
1MA
R9
Out
R4
250kA
Stdby
SW3
Pwr
SW2
Lamp
MOV
130V
C18
20µF
500V
C17
20µF
500V
C16
20µF
500V
R29
R30
R28a
R28b
C15
40µF
500V
C14b
40µF
500V
C14a
40µF
500V
B1+ to OT
Center tap
C12
.0047µF
Choke
B5
B4
B3
R2
R3
C1
22µF
R4
C2
500pF
R5
R6
R7
C5
50pF
C6
.022µF
C7
.022µF
R10
.047µF
C8
R11
R13
R14
R12
C9
.047µF
C10
.047µF
R18
R17
R16
R15
C11
.047µF
R8
PT 1°
PT 2°
V1
V2
V3
B2+
R26*
100R 5W
R22
R25*
100R 5W
R21
R24*
100R 5W
R20
R23*
100R 5W
R19
V4
V5
V6
V7
C13
220µF
100V
R27
50R 25W
OT 1°
OT 2°
PT Ctr
Taps
R1- 1M 1/2W
R2- 33k 1/2W
R3- 1k5 1/2W
R4- 220k 1/2W
R5- 1k5 1/2W
R6- 100k 1/2W
R7- 56k-68k 1/2W
R8- 100k 1/2W
R9- 10k 1/2W
R10- 220k 1/2W
R11- 47k 1W
R12- 1M 1/2W
R13- 1M 1/2W
R14- 1k2 1W
R15- 100k 1/2W
R16- 100k 1/2W
R17- 220k 1/2W
R18- 220k 1/2W
R19, R20, R21, R22- 1k5 1W
*R23, R24, R25, R26- originally 100Ω. Using 1K or
470Ω screen resistors will extend tube life
R28a-b,R29, R30-9k1 2W
Input and output jacks
are chassis-grounded
J2
J3
Speaker Ouput
Impedance
Selector
SW4
4
8
16
Fuse
Mains